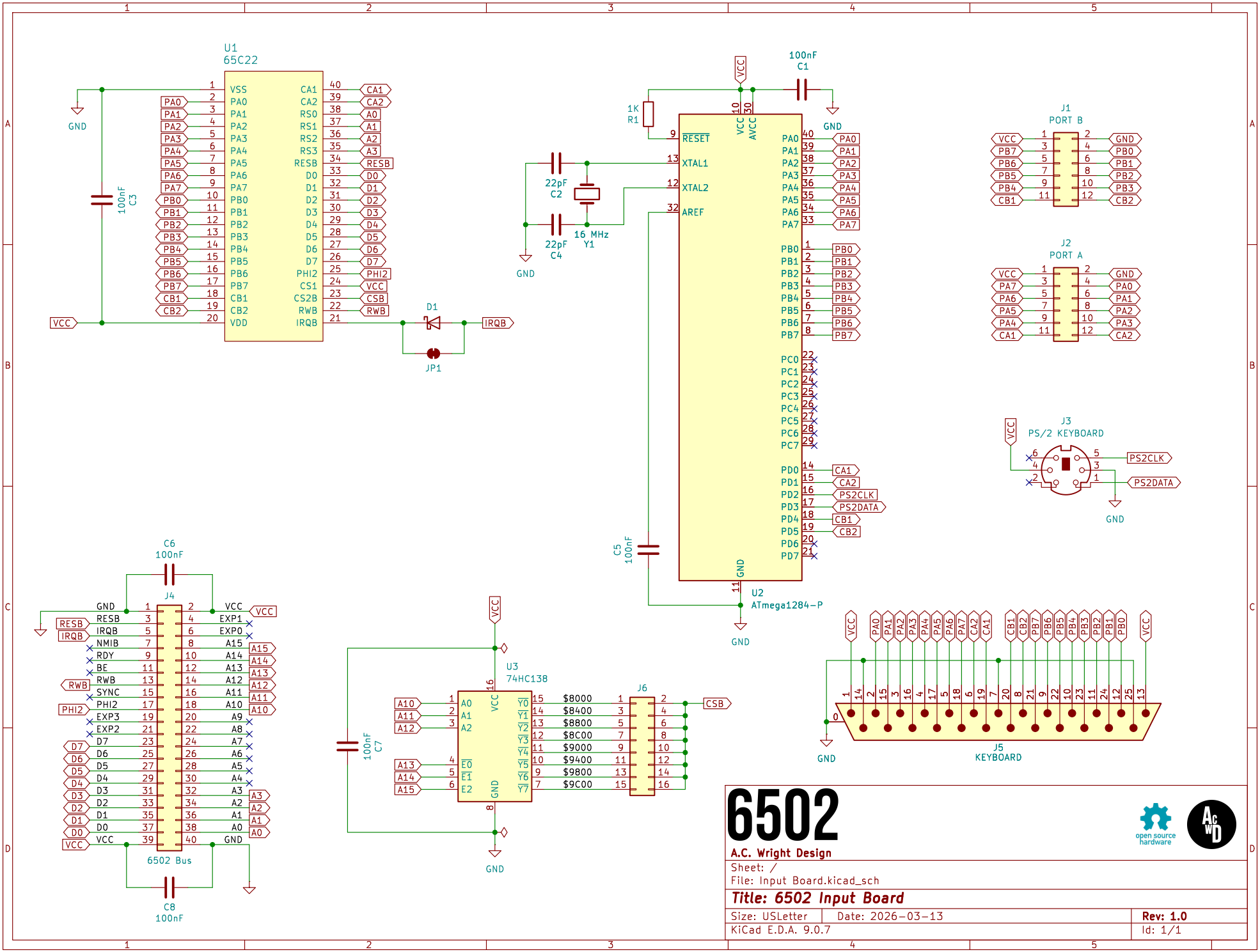

6502

A.C. Wright Design

Sheet: /

File: Input Board.kicad_sch

Title: 6502 Input Board

Size: USLetter	Date: 2026-03-13	**Rev: 1.0**
KiCad E.D.A. 9.0.7		Id: 1/1